Level | Pressure | Flow | Temperature | Liquid Analysis | Registration | Systems Components | Services | Solutions

Technical Information

Promag 55S

Electromagnetic Flow Measuring System
Flow rate measurement of liquids with solids content or inhomogeneous liquids

Application
Electromagnetic flowmeter for bidirectional measurement of liquids with a minimum conductivity of ≥ 5 µS/cm – in particular fluids with solids, and fluids which are abrasive, inhomogeneous or tend to build-up, for example:

- Chemical/mechanical pulps, paper pulp or wood pulp with solids contents up to 15 Vol.-%
- Fruit mashes, fruit concentrates and final products (salad dressings, soups with vegetable pieces)
- Slurries containing high amounts of sand or stone with an abrasive effect, e.g. ore slurry or mortar
- Chemically inhomogeneous fluids (e.g. additives)
- Thick wastewater sludges

- Flow measurement up to 9600 m^3/h
- Can be used up to +180 °C and max. 40 bar
- Fitting lengths as per DVGW/ISO

Application-specific linings and electrodes:
- Natural rubber, polyurethane, PTFE or PFA linings
- Flat, bullet nose, neck, bow or brush electrodes

Approvals for hazardous area:
- ATEX, FM, CSA

Connection to process control system:
- HART, PROFIBUS PA, FOUNDATION Fieldbus

Your benefits
Promag measuring devices offer you cost-effective flow measurement with a high degree of accuracy for a wide range of process conditions.

The **Proline transmitter concept** comprises of:
- High degree of efficiency due to the modular device and operating concept
- Software options for: electrode cleaning, advanced diagnostics, calculation of mass flow and solids content

The robust **Promag S sensors** offer:
- Universal devices, even for difficult fluids
- Excellent accuracy and repeatability
- High resistance to abrasion thanks to industry-optimized linings and measuring electrodes
- Optimum operational safety due to advanced, permanent self-diagnosis
- Simple installation and commissioning
- Insensitive to vibration
- No pressure loss

TI071D/06/en/09.06
71031360

Endress+Hauser
People for Process Automation

Function and system design

Measuring principle

Faraday's law of induction states that a voltage is induced in a conductor moving in a magnetic field.
In electromagnetic measuring, the flowing medium corresponds to the moving conductor. The induced voltage is proportional to the flow velocity and is detected by two measuring electrodes and transmitted to the amplifier. Flow volume is computed on the basis of the pipe's diameter. The constant magnetic field is generated by a switched direct current of alternating polarity.

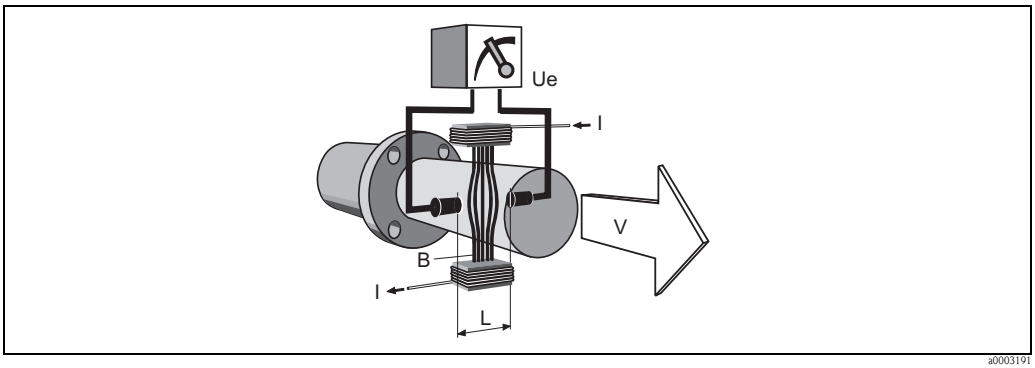

a0003191

$Ue = B \cdot L \cdot v$
$Q = A \cdot v$

Ue *induced voltage*
B *magnetic induction (magnetic field)*
L *electrode gap*
v *flow velocity*
Q *volume flow*
A *pipe cross-section*
I *current strength*

Measuring system

The flow measuring system consists of the following components:
- Promag 55 transmitter
- Promag S sensor (DN 15 to 600)

Two versions are available:
- Compact version: Transmitter and sensor form a single mechanical unit.
- Remote version: Transmitter and sensor are installed separately.

Measurement of solids flow rates

In combination with a density meter, e.g. with "Gammapilot M" from Endress+Hauser, Promag 55S also determines the throughput of solids in mass, volume or percentage rates.
The following order specifications are required for this: order option for software function "Solids content flow" (F-CHIP) and order option for a current input.

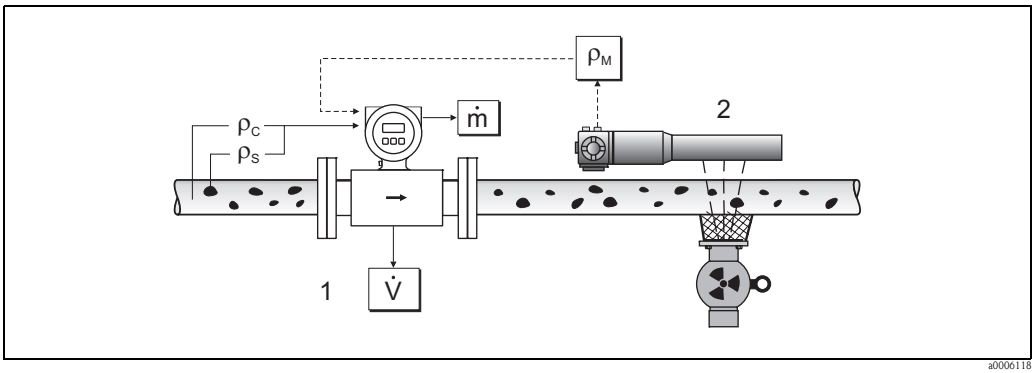

a0006118

Solids content flow measurement (m) with the aid of a density and flow measuring device. If the solid density (ρ_S) and the density of the carrier liquid (ρ_C) are also known, they can be used to calculate the solids flow.

1 *Flow measuring device (Promag 55S) → volume flow (V). The solid density (ρ_S) and the density of the transport liquid (ρ_C) must be entered in the transmitter.*
2 *Density measuring device (e.g. "Gammapilot M") → total fluid density (ρ_M) (transport liquid and solids)*

Input

Measured variable	Flow rate (proportional to induced voltage)
Measuring range	Typical v = 0.01 to 10 m/s with the specified measuring accuracy
Operable flow range	Over 1000 : 1
Input signal	**Status input (auxiliary input):** U = 3…30 V DC, R_i = 5 kΩ, galvanically isolated Configurable for: totalizer(s) reset, positive zero return, error-message reset **Current input:** active/passive selectable, galvanically isolated, full scale value adjustable, resolution: 3 µA, temperature coefficient: typically 0.005% o.f.s./°C; ■ active: 4 to 20 mA, $R_i \leq 150\ \Omega$, U_{out} = 24 V DC, short-circuit proof ■ passive: 0/4 to 20 mA, $R_i \leq 150\ \Omega$, U_{max} = 30 V DC

Output

Output signal	Current output: active/passive selectable, galvanically isolated, time constant selectable (0.01 to 100 s), full scale value adjustable, temperature coefficient: typically 0.005% o.f.s./°C, resolution: 0.5 µA ■ active: 0/4 to 20 mA, $R_L < 700\ \Omega$ (for HART: $R_L \geq 250\ \Omega$) ■ passive: 4 to 20 mA; supply voltage V_S: 18 to 30 V DC; $R_i \geq 150\ \Omega$ Pulse/frequency output: active/passive selectable (Ex i version passive only), galvanically isolated ■ active: 24 V DC, 25 mA (max. 250 mA over 20 ms), $R_L > 100\ \Omega$ ■ passive: open collector, 30 V DC, 250 mA ■ Frequency output: end frequency 2 to 10000 Hz (f_{max} = 12500 Hz), on/off ratio 1:1, pulse width max. 10 s ■ Pulse output: pulse value and pulse polarity selectable, pulse width configurable (0.05 to 2000 ms) PROFIBUS PA interface: ■ Transmission technology (Physical Layer): IEC 61158-2 (MBP), galvanically isolated ■ Profile version 3.0 ■ Current consumption: 11 mA ■ Permissible supply voltage: 9 to 32 V ■ Bus connection with integrated reverse polarity protection ■ Error current FDE (Fault Disconnection Electronic): 0 mA ■ Function blocks: 2 x analog input, 3 x totalizer ■ Output data: volume flow, calculated mass flow, totalizer 1 to 3 ■ Input data: positive zero return (ON/OFF), totalizer control, value for local display ■ Cyclic data transmission compatible with previous model Promag 35S ■ Bus address adjustable via miniature switches or local display (optional) at the measuring device

FOUNDATION Fieldbus interface:
- FOUNDATION Fieldbus H1
- Transmission technology (Physical Layer): IEC 61158-2 (MBP), galvanically isolated
- ITK version 5.0
- Current consumption: 12 mA
- Inrush current: <12 mA
- Error current FDE (Fault Disconnection Electronic): 0 mA
- Permissible supply voltage: 9 to 32 V
- Bus connection with integrated reverse polarity protection
- Function blocks:
  - 5 x Analog Input (execution time: 20 ms)
  - 1 x PID (50 ms)
  - 1 x Descrete Output (20 ms)
  - 1 x Arithmetic (20 ms)
  - 1 x Signal Characterizer (20 ms)
  - 1 x Input Selector (20 ms)
  - 1 x Integrator (25 ms)
- Total VCRs: 48
- Total link objects in VFD: 40
- Output data: volume flow, calculated mass flow, temperature, totalizer 1 to 3
- Input data: positive zero return (ON/OFF), reset totalizer
- Link Master (LM) functionality is supported

Signal on alarm

Current output:
Failsafe mode selectable (e.g. according to NAMUR recommendation NE 43)

Pulse/frequency output:
Failsafe mode selectable

Relay output:
"de-energized" in the event of a fault or power supply failure

Load

See "output signal"

Low flow cutoff

Switch points for low flow cut off freely selectable.

Galvanic isolation

All circuits for inputs, outputs, and power supply are galvanically isolated from each other.

Switching output

Relay output:
Normally closed (NC or break) or normally open (NO or make) contacts available
(default: relay 1 = NO, relay 2 = NC),
max. 30 V / 0.5 A AC; 60 V / 0.1 A DC, galvanically isolated.
Configurable for: error messages, empty pipe detection (EPD), direction of flow, limit values.

广州晋合水处理设备有限公司

jinhe water ®

地　址：广东省广州市海珠区工业大道333号华新园区7幢218
电　话：020-88191905
传　真：020-61139917
邮　编：510300
邮　箱：jinhewater@jinhewater.com
网　址：http://www.jinhewater.com

Endress+Hauser
People for Process Automation